Valmet

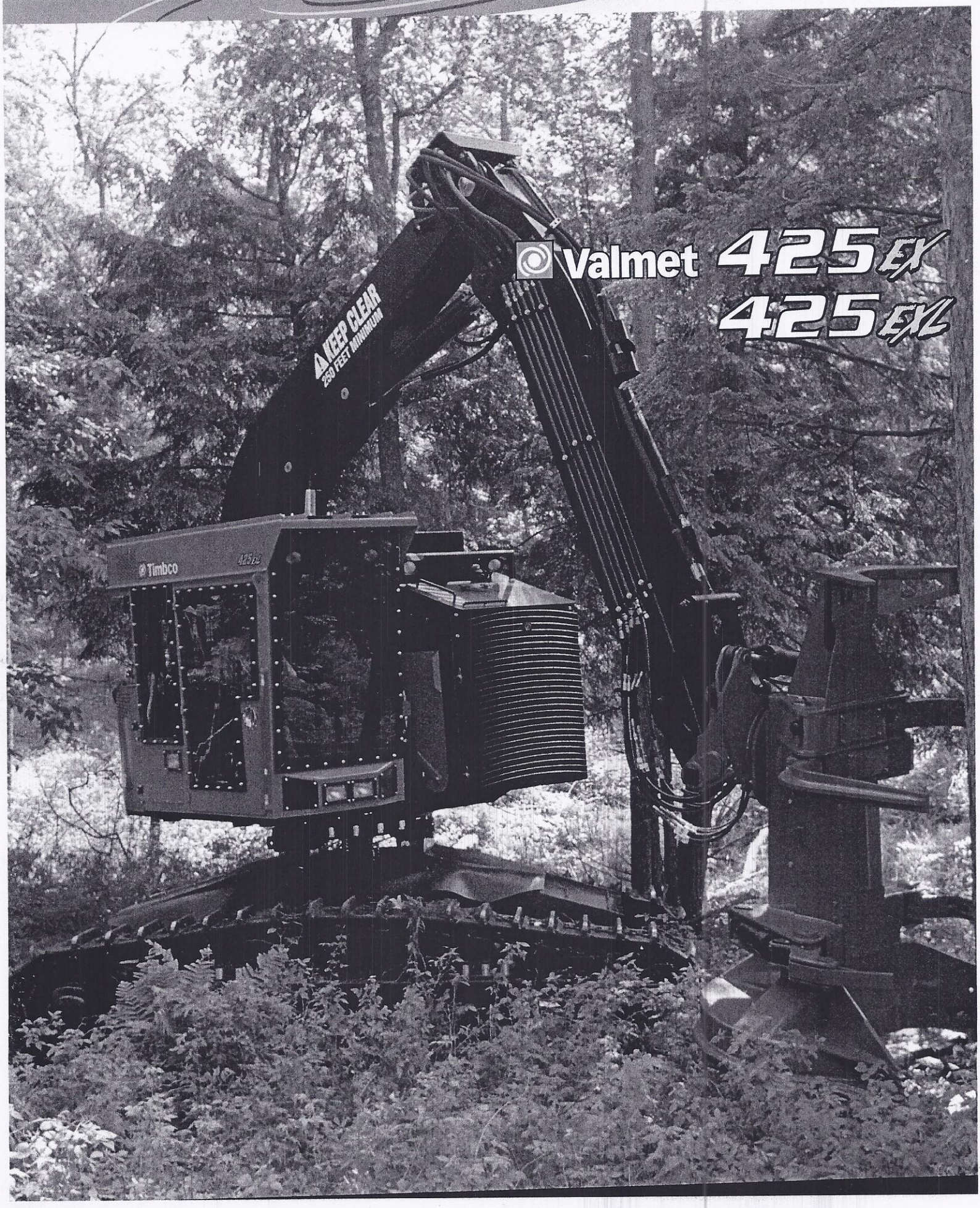

Valmet

425EX (non-leveling) 425EXL (leveling)

Komatsu Forest track machines are legendary for their all-around felling and harvesting performance. The 425 models give you big buncher performance within a highly manueverable track footprint making them the perfect all-around machine for most logging operations.

Valmet 425s have been synonymous with reliability, toughness and high productivity. These machines were part of the initial engine-up, zero-tail swing design revolution with the unique Timbco setback boom and the industry's most proven and dependable leveling capability.

Today, the Valmet 425 EX-series machines provide loggers with greater value by incorporating new technologies that deliver even more reliability, comfort and performance.

Ten halogen lights turn night into day, or add Xenon light option.

Cummins 8.3L QSC delivers 260HP at 2000 RPM. Tier-II compliant, high torque at low working rpm, saves fuel.

Cab is designed for comfort and safety. FOPS, OPS, and ROPS certified. Options include KAB vented seat, sky window, and floor heat/cool system for head-to-toe comfort in any weather

Ground-fill fuel tank holds 180 gallons (680L)

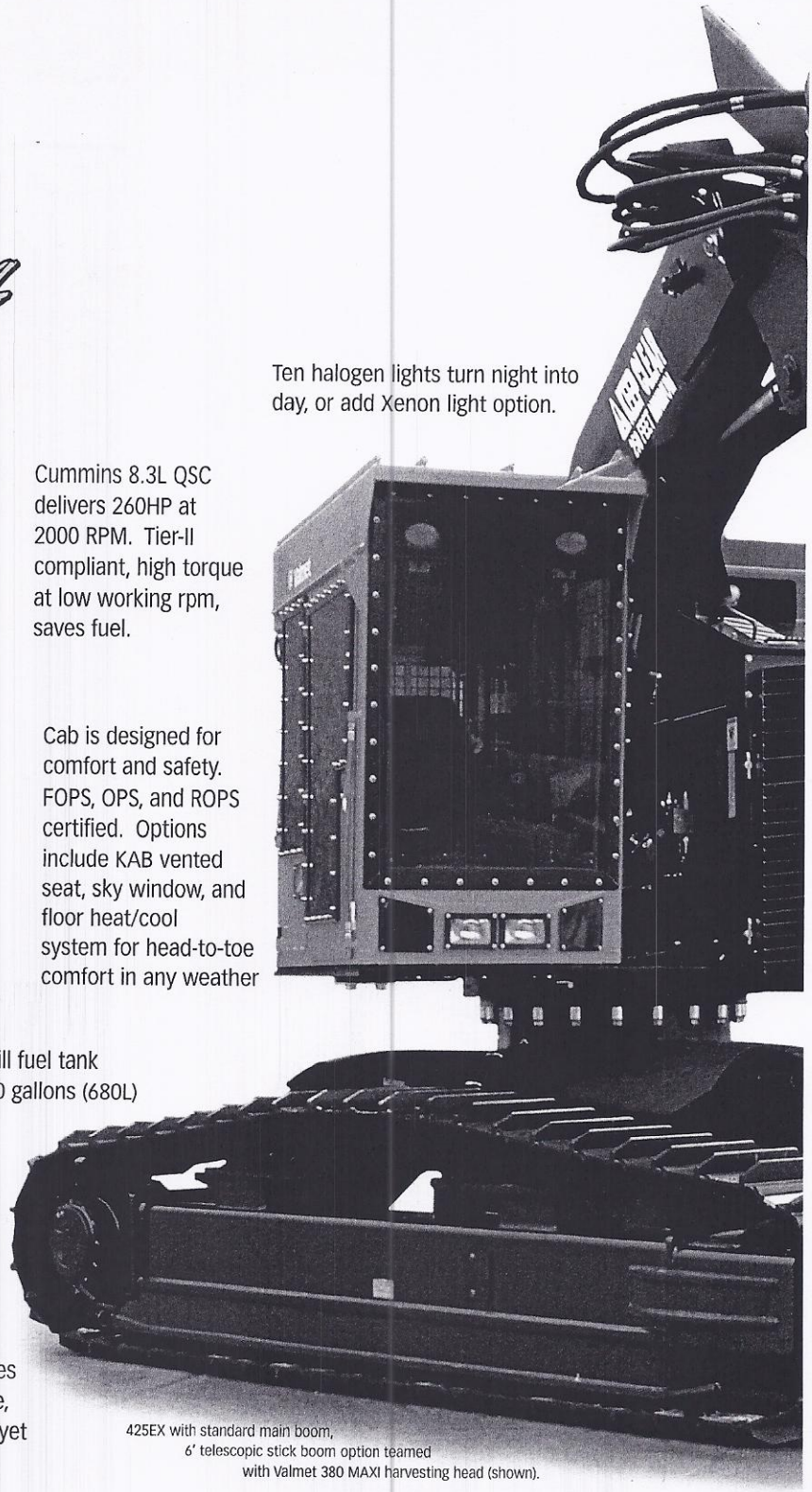

425EX with standard main boom, 6' telescopic stick boom option teamed with Valmet 380 MAXI harvesting head (shown).

High capacity auxiliary oil cooler features temperature-sensing hydraulic fan drive, capable of double the cooling capacity yet saves power in cool weather.

Fan blades reverse automatically and manually to keep the grill clear.

In the "Timbco Tradition," the independent hydrostatic track drives deliver multi-function machine performance. Dedicated drive pumps (one for each track) enable simultaneous tracking without reducing hydraulic performance for rotation, boom, and attachment functions.

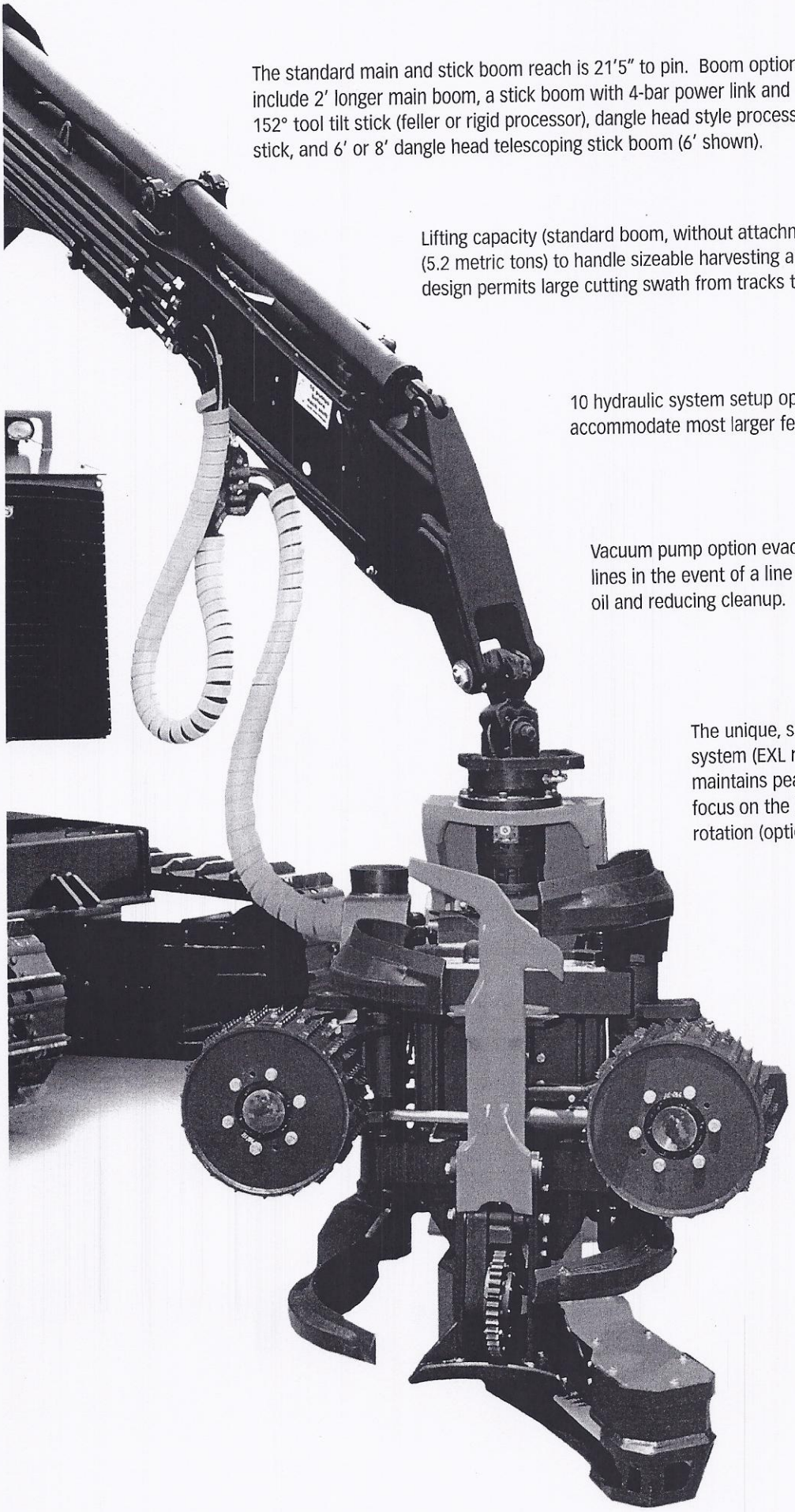

The standard main and stick boom reach is 21'5" to pin. Boom options include 2' longer main boom, a stick boom with 4-bar power link and 152° tool tilt stick (feller or rigid processor), dangle head style processor stick, and 6' or 8' dangle head telescoping stick boom (6' shown).

Lifting capacity (standard boom, without attachment) at 20' is 11,500 lb (5.2 metric tons) to handle sizeable harvesting and felling heads. Boom design permits large cutting swath from tracks to full reach.

10 hydraulic system setup options customize output to accommodate most larger felling or harvesting heads.

Vacuum pump option evacuates hydraulic lines in the event of a line failure, saving oil and reducing cleanup.

The unique, simple and proven 4-way Timbco leveling system (EXL model) meets steep terrain head on, maintains peak performance, and lets the operator focus on the harvest instead of the slope. Continuous rotation (optional on EXL) increases versatility.

Heavy duty forestry undercarriage, 8" (20 cm) pitch track and greased chain assemblies. 425EX track has 48 links and 9 bottom rollers. 425EXL track has 45 links and 8 bottom rollers. Top slide or optional top rollers are available. Two-speed track motors, variable speed optional. Several track shoe options available.

Ground clearance:
EX 32" (88cm), EXL 24.5" (62cm)

Machine shown may include optional equipment.

425EX (non-leveling) 425EXL (leveling) Technical Specifications

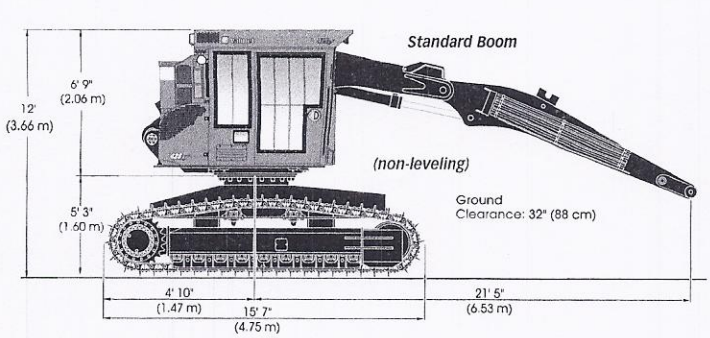

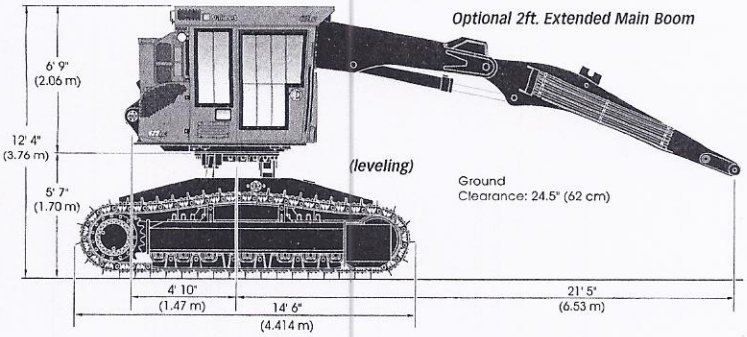

Engine

Cummins QSC	260 HP (194 KW)
Torque	870 ft.- lbs. (1179 Nm) @ 1200 RPM
Fuel capacity	180 gal. (681 litre)

Machine Width

STD 600 mm single grouser	9'8" (2,95 m)
OPT 700 mm single grouser	10'0" (3,05m)
OPT 700 mm double grouser	10'0" (3,05m)
OPT 900 mm triple grouser	EX 10' 8" (3.25m)
	EXL 11' 4" (3.45m)

(EXL requires wide carbody option.)

Machine Weight

EX base machine	54,270 (24,617 kg)
EX w/opt counterwgt	55,950 (25,380 kg)
EXL base machine	54,000 (24,495 kg)

Approximate "woods ready" operating weight without attachment, fully serviced including 1/2 tank fuel 90 gal. (189 litres) at 738 lb. (335 kg) and 175 lb. (80 kg) operator.

Ground Pressure

STD 600 mm single grouser	7.07 psi
OPT 700 mm double grouser	6.10 psi
OPT 700 mm double grouser	6.10 psi
OPT 900 mm triple grouser	4.83 psi
with optional counterweight	
STD 600 mm single grouser	7.28 psi
OPT 700 mm double grouser	6.28 psi
OPT 700 mm double grouser	6.28 psi
OPT 900 mm triple grouser	4.96 psi

Cutting Area (std length boom, to attachment pin)

Maximum	21'5" (6,53 m)
Minimum	7'6" (2,29 m)
Swath	13'11" (4,24 m)

Lifting Capacity (without attachment)

@ 10' (3,05 m)	24,250 lb. (11 000 kg)
@ 15' (4,57 m)	18,200 lb. (8 255 kg)
@ 20' (6,10 m)	11,500 lb. (5 216 kg)

Track System

Heavy forestry undercarriage includes 8" pitch track, sealed and lubricated chain assembly. 425EX track 48 links and 9 bottom rollers. 425EXL track 45 links and 8 bottom rollers. Standard 600mm (24") single grouser shoes. Two-speed auto-shift track motors, high performance, high-reliability final drive.

Tractive effort	64,360 lb. (29 194 kg)
Effort to weight ratio	1.20:1
Speed	(0-3.5 mph (0-5,6 km/h)

Hydraulics

Implement circuits feature digital control system and 9-section main control valve. Dual track drives feature closed loop hydrostatic circuits with separate 55gpm (208 litre) pumps. Independent horsepower control for track drive and implement systems. 110 gallon hydraulic oil reservoir.

Swing

Swing torque	47,100 ft-lbs

Booms

Box construction with 3" (76 mm) minimum diameter pins and Timbco's legendary setback boom geometry. Main to stick knuckle joint 3 1/2" pin.

Operator's Cab

ROPS/FOPS/OPS certified, low noise excellent visibility, and 3 emergency escape routes. Other features include a Red Dot A/C and heater, AM/FM radio with CD, and halogen lighting.

Machine Control System

- Engine management
  - Electronic interface between machine function & engine
  - anti-engine stall independent for track and implement systems
- Operator push button interface
  - Function speed and smoothness
  - 4 operator mode settings
  - Multiple languages
- System self-diagnostics
- Troubleshooting features
  - On board multi-meter with graphics error logging events
- Machine protection
  - Over temperature and under temperature conditions results in reduced machine output
  - System records all at-limit events

Optional Equipment

- Track shoe widths (Contact Dealer)
- 4 boom options (Contact Dealer)
- Cummins QSC 300HP (224 kW)
- Fire suppression system
- 1-1/4" (32 mm) front window
- Xenon high intensity lighting
- Counterweight 1,680 lbs (762kg)
- Engine and cab accessories
- Hydraulic pump, valve, and line options
- Floor heater

Komatsu Forest LLC reserves the right to change specifications without notice or obligation. Products illustrated may be equipped with non-standard equipment. Other manufacturer's equipment or attachments shown are used for illustration purposes only. Komatsu Forest LLC does not warrant the safety, reliability or operation of other manufacturer's equipment or attachments.

Valmet
Komatsu Forest, LLC
1075 Airport Road, P.O. Box 516, Shawano, WI 54166 - USA
Telephone 1-715-524-2820, Fax 1-715-526-2347, www.komatsuforest.com

THE OLIVER STORES
548 WILTON ROAD
FARMINGTON, ME 04938
(207)778-6595

© 2/06 Komatsu Forest LLC, DP 6M #0090-0681