PC200LC-6

NET HORSEPOWER
99 kW 133 HP

OPERATING WEIGHT
21030 – 22423 kg
46,363 – 49,434 lb

KOMATSU





PC200LC-6

HYDRAULIC EXCAVATOR

PC200LC-6

WALK-AROUND

Since its original introduction, the PC200 has set new standards for productivity and control. The improved PC200 introduces several outstanding new features to provide the operator with a faster, more quiet, and easier-to-service machine.

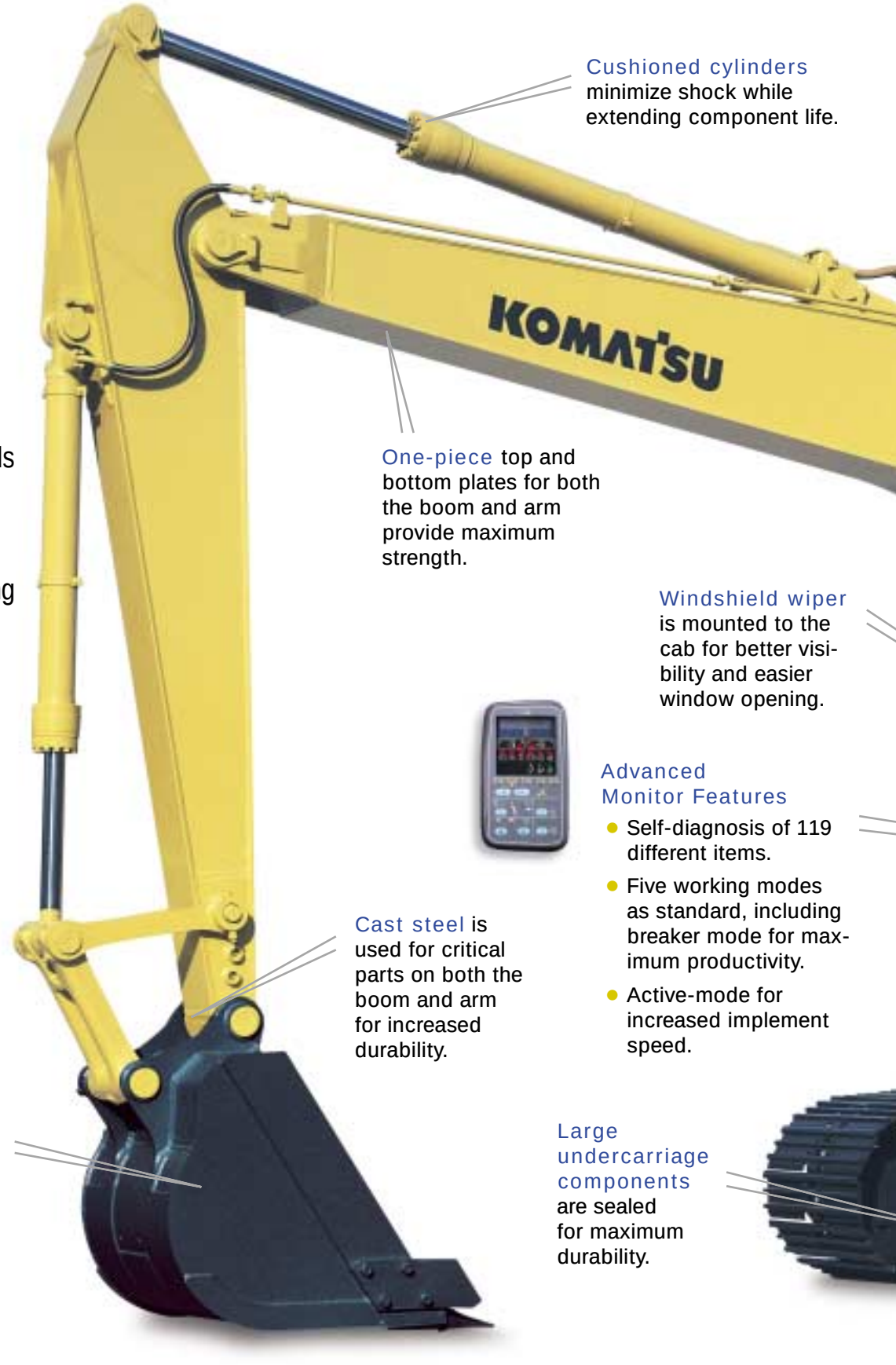

Cushioned cylinders minimize shock while extending component life.

One-piece top and bottom plates for both the boom and arm provide maximum strength.

Windshield wiper is mounted to the cab for better visibility and easier window opening.

Advanced Monitor Features

- Self-diagnosis of 119 different items.
- Five working modes as standard, including breaker mode for maximum productivity.
- Active-mode for increased implement speed.

Cast steel is used for critical parts on both the boom and arm for increased durability.

Komatsu distributors offer a wide variety of attachments that take advantage of the PC200's exceptional versatility.

Large undercarriage components are sealed for maximum durability.

PC200LC-6
HYDRAULIC EXCAVATOR

Net Horsepower:
99 kW **133 HP** @ 2000 RPM

Operating Weight:
21030 – 22423 kg
46,363 – 49,434 lb

Bucket Capacity:
0.42 – 1.22 m^3
0.55 – 1.59 yd^3

Komatsu offers over 20 different excavator models.









Large boom cylinders provide maximum lift capacity.

Comfortable Cab
Komatsu's low-noise cab design uses viscous cab mounts for reduced noise and vibration.

Protected Hydraulic Circuit The cool-running hydraulic system is protected with the most extensive filtration system available, including a high pressure in-line filter.

Emissionized engine, at 133 hp, it is the highest horsepower in its class.

Three-speed travel for smooth and efficient job site travel.

Working Environment

*The Avance cab interior **is spacious and provides a comfortable working environment.***



Multi-Position Controls

The multi-position, pressure proportional control levers allow the operator to work in comfort while maintaining precise control.

A double slide mechanism allows the seat and controllers to move together or independently, allowing the operator to position the controllers for maximum productivity and comfort.

The multi-position diagnostic monitor is easily reached and can be rotated to remove glare. Plus, the inclined dashboard makes the switches and fuel control dials easier to view and use.

Cab Mounts

The cab rests on viscous damping mounts to reduce vibration and noise from the machine body. Operator fatigue is reduced.

Noise

The noise levels at the operator's ear have been decreased by improving the cab mounts and relocating the air conditioner air intake. In addition, a mixed-flow fan reduces fan speed and channels air around the engine, reducing noise.

Air Conditioner

A 7560 kcal **20,400 Btu** air conditioner is now a standard feature along with a hot/cold storage box.

Retractable Seat Belt

The seat is now equipped with a 78mm **3**" wide automotive style retractable seat belt.

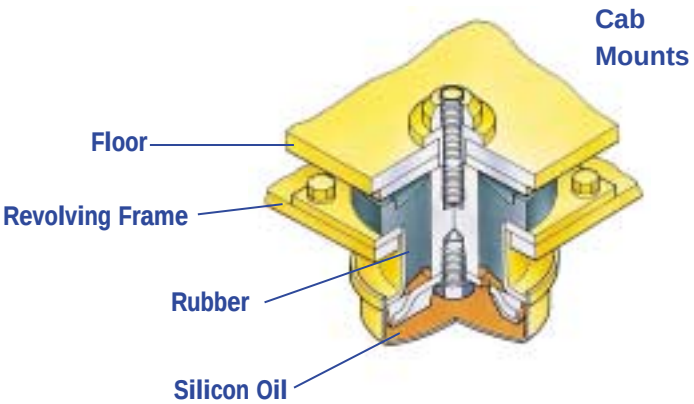

The Avance cab interior is spacious and provides a comfortable working environment.



1. ADJUSTABLE MONITOR
2. STARTER SWITCH
3. FUEL CONTROL DIAL
4. INCLINED DASHBOARD
5. ADJUSTABLE ARMRESTS
6. AIR CONDITIONING
7. STEREO SPEAKERS
8. FULLY ADJUST-ABLE SEAT
9. HOT / COLD STORAGE COMPARTMENT
10. LOW EFFORT JOYSTICKS
11. RETRACTABLE SEAT BELT
12. OPERATOR WEIGHT ADJUSTMENT

HydrauMind



Power, versatility,

maneuverability, controllability—you name it. Never has there been an excavator so easy to operate, so natural, so intuitive, so responsive.

HydrauMind allows the load-sensing and pressure compensating valves to automatically adjust to individual work applications. Adjustments are sensed by the valves. Electronic controls maximize the engine horsepower so full horsepower is available at all times.

*FOR EXAMPLE ...*when the ground condition changes while digging, you don't have to think about changing lever strokes because HydrauMind instantly, silently, and automatically sends just the right amount of oil to the actuators at just the right pressure to accommodate the change.

When you move the boom, arm, and bucket at the same time, all the equipment works naturally, with the optimum combination of speed and power as if it were a human hand.

HydrauMind also makes it easy to change or add valves and work equipment.

ENGINE

The new Komatsu SA6D102E-1 meets emission regulations, including CARB. New hydraulic pumps produce the same power as in the previous model at reduced engine speed. The new engine provides improved emissions without sacrificing valuable hydraulic power. Also, noise levels are reduced to 69 dBA for improvement in operator comfort.

IN-LINE FILTRATION

The PC200 has a cool-running hydraulic system with the most extensive filtration system available. It uses a new high-performance filter glass for improved cleanliness and extended replacement interval. The wide variety of attachments available today means you put more stress on your excavator than ever before. Komatsu provides the extra protection for your machine by providing a high-pressure in-line filter as standard equipment.



Easy Operation

Self-Diagnostic System

The PC200 features the most advanced diagnostic system in the industry. Komatsu's exclusive system identifies 119 items, reduces diagnostic time, and helps you maintain maximum production.

Working Mode Selection

The *Avance* excavator is equipped with five working modes. Each mode is designed to match engine speed, pump speed, and system pressure with the current application.

Working Mode	Application	Advantage
H/O	Heavy-Duty	• Maximum production/power • Fast cycle times • Power up/speed down available
G/O	General	• Good cycle times • Good fuel economy • Power up/speed down available
F/O	Finishing	• Smooth finishing capability • Arm in ½ speed
L/O	Lifting	• Powerful lifting • Power maximum pressure 100% of the time • Reduced speed • Precision control
B/O	Breaker Operations	• Optimum engine rpm, hydraulic flow, and pressure

Power Up/Speed Down Switch*

A button on top of the left joystick provides an instant burst of power at either full speed or half speed depending on the selection made on the monitor.

Selection	Application	Result
Power Up	Tough Digging Operations	Increase implement force by 9% for 8.5 seconds.
Speed Down	Delicate Operations	Speed is reduced by ½. Increase implement force by 9% as long as joystick button is pressed.

*Available in H/O and G/O mode only.

Travel Speeds

The *Avance* excavator is equipped with three travel speeds to provide smooth, efficient travel around the job site.

Self-Diagnostic Monitor



Active Mode
The Active mode increases engine speed, pump flow, and boom down speed to improve productivity up to 7%. Under light loads, equipment speed is faster. When under heavy loads it is possible to detect engine speed.

The LCD portion of the monitor has four different display modes that aid in identifying potential problems before they become major problems:

Four Diagnostic Modes

1 **Time Display mode** is the default mode and shows the time and hour meter reading.

2 **User Code Display mode** displays a trouble code and sounds an alarm when a problem has been detected.

3 **Trouble Data Memory mode** monitors 32 separate items and stores up to 20 abnormalities over 999 hours for effective troubleshooting.

4 **Operation Data mode** monitors 20 separate current operating conditions including system pressure and rpms to keep your machine operating at peak performance. *In addition,* 44-bit patterns allow you to diagnose electrical connections.

Together these modes allow you to troubleshoot 119 different items to minimize downtime.

PC200LC-6

SPECIFICATIONS

ENGINE

Model . . . . . Komatsu SA6D102E-1
Type . . . . . 4-cycle, water-cooled, direct-injection
Aspiration . . . . . Turbocharged
No. of cylinders 6
Bore . . . . . 102 mm **4.02"**
Stroke . . . . . 120 mm **4.72"**
Piston displacement . . . . . 5.88 ltr. **359 in³**
Rated gross horsepower:
108.1 kW **140 HP** at **2000 RPM** (SAE J1349)
Flywheel horsepower:
99 kW **133 HP** at **2000 RPM** (SAE J1349)
Governor . . . . . .All-speed, mechanical

HYDRAULIC SYSTEM

Type . . . . . HydrauMind (Hydraulic Mechanical Intelligence New Design) system. Closed-center system with load-sensing valves and pressure-compensated valves.
No. of selectable working modes 5
Main pump:
Type . . . . . Variable-displacement piston pumps
Pumps for . . . . . Boom, arm, bucket, swing, and travel circuits
Maximum flow . . . . . 2 x 206 ltr. **2 x 54.4 gpm**/min.
Hydraulic motors:
Travel . . . . . 2 x Axial piston motor with parking brake
Swing . . . . . 1 x Axial piston motor with swing holding brake
Relief valve setting:

Implement circuits up to	365 kg/cm²	**5,190 PSI**
Travel circuit	355 kg/cm²	**5,050 PSI**
Swing circuit	280 kg/cm²	**3,980 PSI**
Pilot circuit	38 kg/cm²	**540 PSI**
Service valve	up to 295 kg/cm²	**4,190 PSI**

Hydraulic cylinders:
Number of cylinders – bore x stroke

Boom	2 – 130 mm x 1285 mm	**4.7" x 50.6"**
Arm	1 – 135 mm x 1490 mm	**5.3" x 58.7"**
Bucket	1 – 115 mm x 1120 mm	**4.5" x 44.1"**

Service valves maximum flow:
First valve . . . . . 412 ltr./min.**108.8 gpm**
Second valve . . . . . 206 ltr./min.**54.4 gpm**
Third valve . . . . . 206 ltr./min.**54.4 gpm**

DRIVES AND BRAKES

Steering control . . . . . Two levers with pedals
Drive method . . . . . Fully hydrostatic
Travel motor . . . . . Axial piston motor, in-shoe design
Reduction system . . . . . Planetary double reduction
Max. drawbar pull . . . . . 17700 kg **39,020 lb**
Gradability 70%
Max. travel speed (High) . . . . . 5.5 km/h **3.4 MPH**
Max. travel speed (Mid) . . . . . 4.1 km/h **2.6 MPH**
Max. travel speed (Low) . . . . . 3.0 km/h **1.9 MPH**
Service brake . . . . . Hydraulic lock
Parking brake . . . . . Oil disc brake

SWING SYSTEM

Driven by . . . . . Hydraulic motor
Swing reduction . . . . . Planetary double reduction
Swing circle lubrication . . . . . Grease-bathed
Swing lock . . . . . Oil disc brake
Swing speed . . . . . 12.4 RPM
Swing torque . . . . . 6427 kg.m **46,468 ft lbs**

UNDERCARRIAGE

Center frame . . . . . X-frame
Track frame . . . . . Box-section
Seal of track . . . . . Sealed track
Track adjuster . . . . . Hydraulic
No. of shoes . . . . . 49 each side
No. of carrier rollers . . . . . 2 each side
No. of track rollers . . . . . 9 each side

COOLANT AND LUBRICANT CAPACITY (REFILLING)

Fuel tank	340 ltr.	**89.8 U.S. gal**
Radiator	22.2 ltr.	**5.9 U.S. gal**
Engine	24.0 ltr.	**6.3 U.S. gal**
Final drive, each side	4.2 ltr.	**1.1 U.S. gal**
Swing drive	5.5 ltr.	**1.5 U.S. gal**
Hydraulic tank	166 ltr.	**43.9 U.S. gal**

OPERATING WEIGHT (APPROXIMATE)

Operating weight, including 5700 mm **18'8"** one-piece boom, 2925 mm **9'6"** arm, SAE heaped 0.74 m³ 0**.97 yd³** back-hoe bucket, operator, lubricant, coolant, full fuel tank, and the standard equipment.

Triple-Grouser Shoes	PC200LC-6	
	Operating Weight	Ground Pressure
600 mm **24"**	21030 kg **46,363 lb**	0.45 kg/cm² **6.40 PSI**
700 mm **28"**	21300 kg **46,970 lb**	0.39 kg/cm² **5.55 PSI**
800 mm **31.5"**	21580 kg **47,580 lb**	0.35 kg/cm² **4.99 PSI**
900 mm **35.5"**	21860 kg **48,200 lb**	0.32 kg/cm² **4.55 PSI**
Maximum Weight	22423 kg **49,434 lb**	0.33 kg/cm² **4.67 PSI**

Maximum weights also include 5700 mm **18'8"** HD boom, 4000 mm **13'4"** arm, and a .50 m³ **0.66 yd³** HD bucket.

Arm Length		Weight Adjustments	
1800 mm	**5' 11"**	87 kg	**192 lb**
2400 mm	**7' 11"**	51 kg	**112 lb**
4000 mm	**13' 4"**	430 kg	**950 lb**
HD Boom	**18' 8"**	82 kg	**181 lb**

DIMENSIONS

		1.8 m arm	5'11"	2.4 m arm	7'11"	2.9 m arm	9'6"	4.0 m arm	**13'4"
A	Overall length	9510 mm	31'2"	9485 mm	31'1"	9425 mm	30'11"	9425 mm	30'11"
B	Length on ground (transport)	6470 mm	21'3"	5860 mm	19'3"	5020 mm	16'6"	4310 mm	14'2"
C	Overall height (to top of boom)	2985 mm	9'10"	3170 mm	10'5"	2970 mm	9'9"	3170 mm	10'5"
D	Overall width	3080 mm	10'1"						
E	Overall height (to top of cab)	2905 mm	9'6"						
F	Ground clearance, counterweight	1085 mm	3'7"						
G	Min. ground clearance	440 mm	1'5"						
H	Tail swing radius	2780 mm	9'1"						
I	Length of track on ground	3640 mm	11'11"						
J	Track length	4450 mm	14'7"						
K	Track gauge	2380 mm	7'10"						
L	Width of crawler	3080 mm	10'1"						
M	Shoe width	700 mm	28"						
N	Grouser height	26 mm	1"						
O	Machine cab height	2020 mm	6'8"						
P	Upper structure width	2710 mm	8'11"						
Q	Distance, swing center to rear end	2740 mm	9'0"						

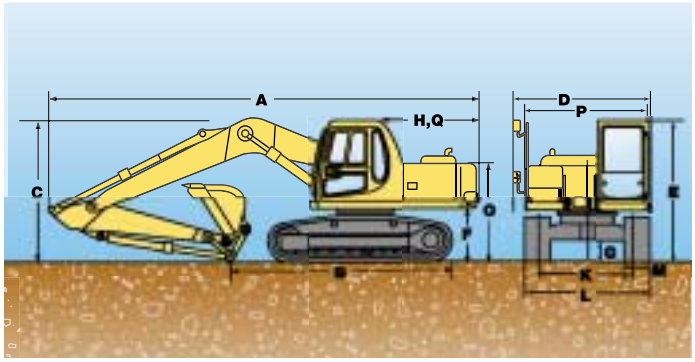

113 m **3'8" Extension arm 2.93 m +**9'6"** arm

WORKING RANGE AND BUCKET/ARM COMBINATION

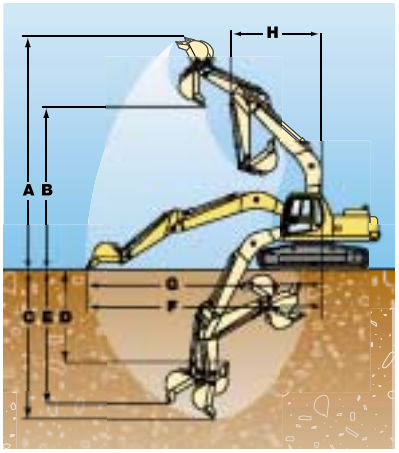

		1.8 m arm	5'11"	2.4 m arm	7'11"	2.9 m arm	9'6"	4.0 m**arm	13'4"
A	Max. digging height	8895 mm	29'2"	9050 mm	29'8"	9305 mm	30'6"	9700 mm	31'10"
B	Max. dumping height	6065 mm	19'11"	6255 mm	20'6"	6475 mm	21'3"	6970 mm	22'10"
C	Max. digging depth	5535 mm	18'2"	6095 mm	20'0"	6620 mm	21'9"	7725 mm	25'4"
D	Max. vertical wall digging depth	4965 mm	16'3"	5315 mm	17'5"	5980 mm	19'7"	7075 mm	23'3"
E	Max. digging depth of cut for 8' level	5160 mm	16'11"	5840 mm	19'2"	6435 mm	21'1"	7590 mm	24'11"
F	Max. digging reach	8915 mm	29'3"	9395 mm	30'10"	9875 mm	32'5"	10880 mm	35'8"
G	Max. digging reach at ground	8720 mm	28'7"	9205 mm	30'2"	9700 mm	31'10"	10705 mm	35'1"
H	Min. swing radius	3640 mm	11'11"	3710 mm	12'2"	3630 mm	11'11"	3630 mm	11'11"
Bucket digging force☆		14900 kg	32,850 lb*	12700 kg	28,000 lb	12700 kg	28,000 lb	12700 kg	28,000 lb
Arm crowd force		13200 kg	29,100 lb	11700 kg	25,800 lb	10000 kg	22,050 lb	8200 kg	18,080 lb

☆At power max

*Optional bucket cylinder is required

1.13 m **3'8" Extension arm 2.93 m +**9'6"** arm

LIFTING CAPACITY

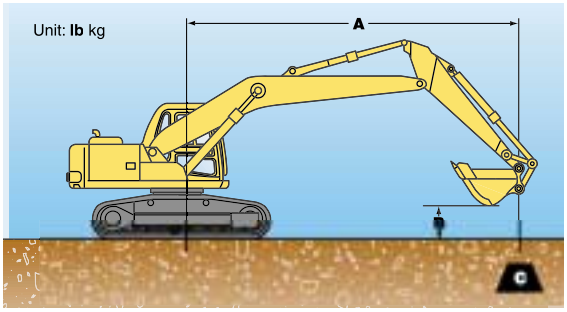

Equipment:
- Boom: 5700 mm **18'8"**
- Bucket: 0.74 m³ **0.97 yd³**
- Shoes: 800 mm **31.5"**
- Lifting Mode

A: Reach from swing center
B: Bucket hook height
C: Lifting capacity
Cf: Rating over front
Cs: Rating over side
⊗: Rating at maximum reach

Arm: 5'11" 1800 mm — Unit: kg **lb**

A / B	1.5 m **5'**		3.0 m **10'**		4.6 m **15'**		6.1 m **20'**		7.6 m **25'**		⊗ MAX.	
	Cf	Cs	Cf	Cs	Cf	Cs	Cf	Cs	Cf	Cs	Cf	Cs
7.6 m **25'**											*4700 ***10,300**	*4700 ***10,300**
6.1 m **20'**							*5850 ***12,800**	4450 **9,900**			*4300 ***9,600**	3950 **8,700**
4.6 m **15'**					*7850 ***16,200**	7050 **15,500**	*6350 ***14,000**	4350 **9,700**			*4250 ***9,400**	3150 **7,000**
3.0 m **10'**					*9500 ***21,000**	6500 **14,300**	6900 **15,200**	4150 **9,200**	4750 **10,500**	2850 **6,300**	*4450 ***9,800**	2800 **6,200**
1.5 m **5'**					10650 **23,600**	6500 **13,300**	6650 **14,700**	3950 **8,700**	4650 **10,300**	2800 **6,100**	4500 **10,000**	2700 **6,000**
0.0 m **0'**					10400 **22,900**	5850 **12,900**	6500 **14,400**	3800 **8,400**			4700 **10,300**	2800 **6,100**
–1.5 m **–5'**			*11450 ***25,300**	11450 **25,300**	10400 **22,900**	5850 **12,900**	6500 **14,300**	3800 **8,400**			5300 **11,600**	3150 **6,900**
–3.0 m **–10'**			*15050 ***35,200**	11850 **26,100**	10600 **23,300**	6000 **13,200**					6800 **15,000**	4000 **8,900**

*Load is limited by hydraulic capacity rather than tipping. Ratings are based on SAE Standard No. J1097. Rated loads do not exceed 87% of hydraulic lift capacity or 75% of tipping load.

Arm: 2400 mm **7'11"** — Unit: kg **lb**

A / B	1.5 m **5'**		3.0 m **10'**		4.6 m **15'**		6.1 m **20'**		7.6 m **25'**		⊗ MAX.	
	Cf	Cs	Cf	Cs	Cf	Cs	Cf	Cs	Cf	Cs	Cf	Cs
7.6 m **25'**											*4100 ***9,100**	*4100 ***9,100**
6.1 m **20'**							*5050 ***11,200**	4600 **10,100**			*3850 ***8,500**	3400 **7,500**
4.6 m **15'**							*5700 ***12,500**	4450 **9,800**	4900 **10,800**	3000 **6,600**	*3850 ***8,500**	2800 **6,200**
3.0 m **10'**					*8580 ***18,900**	6700 **14,000**	*6750 ***14,800**	4250 **9,400**	4800 **10,600**	2800 **6,400**	*4050 ***8,900**	2550 **5,600**
1.5 m **5'**					*10700 ***23,600**	6200 **13,700**	6750 **14,800**	4000 **8,900**	4700 **10,300**	2800 **6,200**	4100 **9,000**	2400 **5,300**
0.0 m **0'**					10500 **23,100**	5900 **13,000**	6550 **14,400**	3850 **8,500**	4600 **10,200**	2750 **6,000**	4200 **9,300**	2500 **5,500**
–1.5 m **–5'**	*6250 ***13,800**	*6250 ***13,800**	*10550 ***23,200**	*10550 ***23,200**	10400 **22,900**	5850 **12,800**	6450 **14,300**	3800 **8,300**			4850 **10,200**	2750 **6,100**
–3.0 m **–10'**	*11150 ***24,600**	*11150 ***24,600**	*17250 ***38,000**	11700 **25,800**	10500 **23,100**	5900 **13,000**	6500 **14,400**	3850 **8,400**			5700 **12,600**	3350 **7,400**
–4.6 m **–15'**			*14300 ***31,600**	12150 **26,800**	*9800 ***21,600**	6050 **13,300**					*8400 ***18,600**	5100 **11,300**

*Load is limited by hydraulic capacity rather than tipping. Ratings are based on SAE Standard No. J1097. Rated loads do not exceed 87% of hydraulic lift capacity or 75% of tipping load.

Arm: 2900 mm **9'6"** — Unit: kg **lb**

A / B	1.5 m **5'**		3.0 m **10'**		4.6 m **15'**		6.1 m **20'**		7.6 m **25'**		⊗ MAX.	
	Cf	Cs	Cf	Cs	Cf	Cs	Cf	Cs	Cf	Cs	Cf	Cs
7.6 m **25'**											*2600 ***5,800**	*2600 ***5,800**
6.1 m **20'**									*2700 ***5,900**	*2700 ***5,900**	*2450 ***5,400**	*2450 ***5,400**
4.6 m **15'**							*5150 ***11,300**	4550 **10,000**	*4500 ***9,900**	3050 **6,700**	*2450 ***5,400**	*2450 ***5,400**
3.0 m **10'**			*11850 ***26,100**	*11850 ***26,100**	*7700 ***17,000**	6850 **15,200**	*6250 ***13,700**	4300 **9,500**	4850 **10,700**	2950 **6,500**	*2550 ***5,700**	2300 **5,100**
1.5 m **5'**			*6150 ***13,600**	*6150 ***13,600**	*10050 ***22,200**	6350 **14,000**	6800 **15,000**	4100 **9,000**	4700 **10,400**	2850 **6,300**	*2800 ***6,200**	2200 **4,900**
0.0 m **0'**			*6800 ***15,000**	*6800 ***15,000**	10600 **23,400**	6000 **13,200**	6600 **14,500**	3900 **8,600**	4600 **10,200**	2750 **6,000**	*3200 ***7,100**	2250 **5,000**
–1.5 m **–5'**	*5850 ***12,900**	*5850 ***12,900**	*9850 ***21,700**	*9850 ***21,700**	10450 **23,000**	5850 **12,800**	6480 **14,300**	3800 **8,300**	4550 **10,100**	2700 **5,900**	*3900 ***8,600**	2450 **5,400**
–3.0 m **–10'**	*9400 ***20,700**	*9400 ***20,700**	*14550 ***32,100**	11650 **25,700**	10450 **23,000**	5860 **13,000**	6480 **14,300**	3800 **8,300**			4950 **10,900**	2960 **6,500**
–4.6 m **–15'**			*15800 ***34,800**	12000 **26,400**	10650 **23,600**	6050 **13,300**					6950 **15,300**	4100 **9,000**

*Load is limited by hydraulic capacity rather than tipping. Ratings are based on SAE Standard No. J1097. Rated loads do not exceed 87% of hydraulic lift capacity or 75% of tipping load.

BACKHOE BUCKET AND ARM COMBINATION

Bucket Type	Bucket								Arms			
	Capacity		OLW		Weight		Number of Teeth	Tooth Size	5'11"	7'11"	2.9 m 9'6"	4.0 m* 13'4"
Komatsu "H" Series HD	0.50 m³	**0.66 yd³**	610 mm	**24"**	639 kg	**1,409 lb**	4	X330	V	V	W	V
	0.67 m³	**0.88 yd³**	762 mm	**30"**	679 kg	**1,496 lb**	4	X330	V	V	V	W
	0.86 m³	**1.13 yd³**	914 mm	**36"**	767 kg	**1,690 lb**	4	X330	V	V	V	Y
	1.03 m³	**1.35 yd³**	1067 mm	**42"**	842 kg	**1,856 lb**	5	X330	V	V	V	Z
	1.22 m³	**1.59 yd³**	1219 mm	**48"**	910 kg	**2,007 lb**	5	X330	V	W	X	Z
Komatsu "H" Series SD	0.48 m³	**0.63 yd³**	610 mm	**24"**	655 kg	**1,445 lb**	3	X330AP	V	V	V	V
	0.65 m³	**0.85 yd³**	762 mm	**30"**	717 kg	**1,580 lb**	4	X330AP	V	V	V	W
	0.83 m³	**1.08 yd³**	914 mm	**36"**	792 kg	**1,745 lb**	4	X330AP	V	V	V	X
	0.99 m³	**1.30 yd³**	1067 mm	**42"**	895 kg	**1,973 lb**	5	X330AP	V	V	W	Z
	1.16 m³	**1.52 yd³**	1219 mm	**48"**	1036 kg	**2,283 lb**	5	X330AP	V	W	X	Z
Komatsu MHD	0.47 m³	**0.61 yd³**	610 mm	**24"**	639 kg	**1,409 lb**	4	V29	V	V	V	W
	0.63 m³	**0.82 yd³**	762 mm	**30"**	711 kg	**1,568 lb**	4	V29	V	V	V	V
	0.80 m³	**1.04 yd³**	914 mm	**36"**	794 kg	**1,750 lb**	5	V29	V	V	V	Y
	0.96 m³	**1.26 yd³**	1067 mm	**42"**	865 kg	**1,907 lb**	5	V29	V	V	V	Z
	1.13 m³	**1.48 yd³**	1219 mm	**48"**	934 kg	**2,060 lb**	5	V29	V	W	X	Z
Komatsu SHD	0.42 m³	**0.55 yd³**	610 mm	**24"**	648 kg	**1,428 lb**	4	V33	V	V	V	V
	0.59 m³	**0.77 yd³**	762 mm	**30"**	729 kg	**1,607 lb**	4	V33	V	V	V	V
	0.74 m³	**0.97 yd³**	914 mm	**36"**	806 kg	**1,778 lb**	5	V33	V	V	V	X
	0.90 m³	**1.18 yd³**	1067 mm	**42"**	880 kg	**1,941 lb**	5	V33	V	V	V	Z
	1.04 m³	**1.36 yd³**	1219 mm	**48"**	941 kg	**2,074 lb**	5	V33	V	V	W	Z
Komatsu SHD/KVX	0.42 m³	**0.55 yd³**	610 mm	**24"**	639 kg	**1,409 lb**	3	M36	V	V	V	V
	0.59 m³	**0.77 yd³**	762 mm	**30"**	732 kg	**1,614 lb**	4	M36	V	V	V	W
	0.74 m³	**0.97 yd³**	914 mm	**36"**	801 kg	**1,765 lb**	4	M36	V	V	V	W
	0.90 m³	**1.18 yd³**	1067 mm	**42"**	885 kg	**1,952 lb**	5	M36	V	V	V	Y
	1.04 m³	**1.36 yd³**	1219 mm	**48"**	943 kg	**2,079 lb**	5	M36	V	V	W	Z
Komatsu SHD/KVX High Impact	0.59 m³	**0.77 yd³**	762 mm	**30"**	856 kg	**1,887 lb**	3	M48	V	V	V	W
	0.74 m³	**0.97 yd³**	914 mm	**36"**	942 kg	**2,077 lb**	3	M48	V	V	V	Y
	0.90 m³	**1.18 yd³**	1067 mm	**42"**	1052 kg	**2,320 lb**	4	M48	V	V	W	Z
	1.04 m³	**1.36 yd³**	1219 mm	**48"**	1071 kg	**2,361 lb**	4	M48	V	W	X	Z

V – Used with weights up to 3,500 lb/yd³, W – Used with weights up to 3,000 lb/yd³

X – Used with weights up to 2,500 lb/yd³, Y – Used with weights up to 2,000 lb/yd³, Z – Not useable

* –2.9 m **9'6"** arm + 1.13 m **3'8"** arm ext.

STANDARD EQUIPMENT

- Air cleaner, double element
- Alternator, 50A
- Air conditioner (7560 kca **20,400 Btu**) lwith heater, fresh air, includes cool and hot box
- A/M–F/M Radio
- Auto de-airation system for fuel line
- Auto-deceleration
- Auto engine warm-up
- Batteries, 2x12V/170Ah
- Boom holding valve
- Cab which includes: antenna; ashtray; cigarette lighter; floor mat; front windshield wiper and washer; luggage and magazine box; seat, fully adjustable with suspension, double slide mechanism and seat belt; window guard (RH)
- Counterweight, 3750 kg **8,267 lb**
- Dustproof net for radiator
- Electronic monitor
- Engine overheat prevention
- Fuel tank sight gauge protection
- Hinged oil cooler
- In-line filter
- Power maximizing system
- Pump/engine room partition cover
- Rear view mirror (RH and LH)
- Shoes, 700 mm **28"**, triple grouser
- Speed down system
- Starting motor, 5.5 kW
- Swing/boom priority selection
- Travel alarm
- Turbocharger cover
- Working mode selection

OPTIONAL EQUIPMENT

- Arm
  - 2.4 m **7'11"**
  - 2.4 m **7'11"** with piping
  - 2.9 m **9'6"**
  - 2.9 m **9'6"** with piping
  - 1.13 m **3'8"** arm extension
- Arm holding valve
- Boom, one piece
  - 5.7 m **18'8"**
  - 5.7 m **18'8"**, heavy-duty with piping
- Front window guard, full length
- Fuel refill pump
- Hydraulic control unit
  - 1 additional actuator
  - 2 additional actuators
- Shoes, triple grouser
  - 800 mm **31.5"**
- Swing-back reducing valve
- Track roller guards, full length
- Under cover for track frame center

ATTACHMENT OPTIONS

- Buckets
  —Lug bushing
  —Play adjustment mechanism
- Komatsu breakers/hammers
- Komatsu plate compactors
- Lincoln autolube systems
- JRB couplers
- PSM thumbs

For a complete line up of available attachments, please contact your local Komatsu distributor

SUPPORT



Count on Komatsu and your local distributor for the support you deserve. Our success depends on satisfying your need for productive equipment and supporting that equipment. That's why we have one of the largest and strongest heavy-equipment distributor organizations in North America. Their personnel are not only trained to help you select the equipment that is best-matched for your business but to support that equipment. That's why we have an ongoing commitment for:

Finance Through its finance company, Komatsu can offer you a wide variety of financing alternatives designed to meet your needs. Programs include municipal leases for governmental agencies, conditional sales contracts, and leases with $1 purchase options for customers interested in owning their equipment.

Ask your distributor about Komatsu leasing. We offer finance and operating leases and the unique *Advantage Lease* which offers you predetermined purchase, return, and renewal options.

Parts Three computer-linked parts distribution centers provide fast access to anywhere in the U.S. and Canada. Most parts are available overnight. Plus, Komatsu distributors keep a large assortment of commonly used parts in stock for immediate access.

Remanufactured parts Save money and still have the same warranty as new parts at a fraction of the cost with like-new remanufactured parts.

Maintenance Take advantage of the experience we have gained and ask your distributor about our factory-supported programs including: regular scheduled maintenance, oil and wear analysis, diagnostic inspections, undercarriage inspections, training, special service tools, parts programs, and even a special software program to help your distributor keep track of and manage service-related data.

AESS427-02
©2001 Komatsu Printed in USA
DK08(5M)(5M)C 03/02DataKom 08/01 (EV-2)

KOMATSU

Komatsu America International Company
440 N. Fairway Dr., Vernon Hills, IL 60061

www.KomatsuAmerica.com

Materials and specifications are subject to change without notice
KOMATSU is a trademark of Komatsu Ltd. Japan